Fuji Electric

Innovating Energy Technology

Fuji Integrated Controller MICREX-SX Series

Programmable Controller SPF

Achieving Cost Efficiency and
High Performance Computing

SPF

22B1-E-0019h

Achieves excellent cost performance
Flexibly supports machine based systems

- High-speed, high-functioning computing performance
- Flexible application via an abundance of options
- 200kHz, compatible with up to 4-axis servo systems
- IEC61131-3 compliant programming

SPF

High-speed computing operations

The unit has impressive sequence computing performance for machine control operations, as well as enhanced data processing capabilities. Instruction execution time is as fast as 0.3 μs for basic instructions and 0.87 μs for data instructions, enabling the unit to achieve the highest performance of its class. This contributes to the production of machine based systems.

Positioning function

This function is compatible with a 200 kHz, 4-axis pulse output. It can be utilized for increasingly sophisticated and high-accuracy positioning.

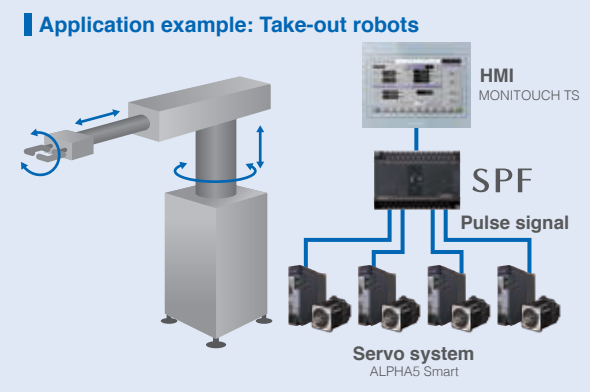

* Support possible with high-functionality type base unit. 14 points output type can support up to 3 axes.

Two types of base units for varying applications

We have prepared two types of base units: the high-functionality type base unit (Model: NA0PA), which is suitable for positioning control while connected to a servo system; and the standard type base unit (Model: NA0PB), which is suitable for the control of general equipment not supported by a servo system. Usage can be decided depending on application.

Rich communication functions

RS-232C, RS-485 and Ethernet communication can be established by simply mounting a small board to the base unit. Communication functions can also be achieved through use of an expansion unit on the left side.

Programming tools based on application need

Two types of programming tools can be selected depending on applications. There are two types of programming tools: Expert, which is compliant with the international standard IEC 61131-3 for PLCs; and Standard, which mainly consists of ladder logic. Function blocks (FB) can also be used depending on the control application.

Internal large-capacity memory

In addition to enhancements to the functional system and increased data processing, the unit comes with a large-capacity program and data memory.

Model	Memory capacity	
	Program	Data
14 points	8 k steps	20 k words
24 points		
32 points	20 k steps	40 k words
40 points		
60 points		

MONITOUCH connection function

Connection can be made with a MONITOUCH programmable display via loader ports. It does not require any special communication equipment.

Web connection function NEW

Data can be read and written through a Web browser of a PC.

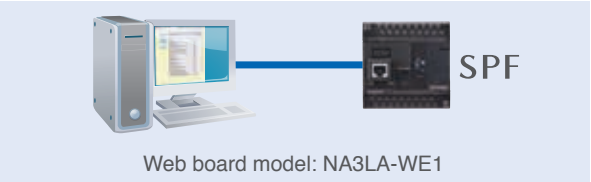

Load cell compatible

We offer a unique lineup of modules compatible with load cells used for metering and weighing systems, tank scales, etc. They can be applied to wide range of applications such as cement plants.

Comes standard with a calendar function

A calendar function comes standard as an essential function for monitoring machine based systems.

MODEL LINEUPS

Base unit (CPU unit)

14 points base unit

NA0PA14T-34C
Power supply voltage: 24 V DC
DI/O: input 8 points, output 6 points
Output type: Tr sink output

NA0PB14R-34C
Power supply voltage: 24 V DC
DI/O: input 8 points, output 6 points
Output type: Ry output

24 points base unit

NA0PA24T-□C
Power supply voltage: 100 to 240 V AC or 24 V DC
DI/O: input 14 points, output 10 points
Output type: Tr sink output

NA0PB24R-□C
Power supply voltage: 100 to 240 V AC or 24 V DC
DI/O: input 14 points, output 10 points
Output type: Ry output

32 points base unit

NA0PA32T-□C
Power supply voltage: 100 to 240 V AC or 24 V DC
DI/O: input 20 points, output 12 points
Output type: Tr sink output

NA0PB32R-□C
Power supply voltage: 100 to 240 V AC or 24 V DC
DI/O: input 20 points, output 12 points
Output type: Ry output

40 points base unit

NA0PA40T-□C
Power supply voltage: 100 to 240 V AC or 24 V DC
DI/O: input 24 points, output 16 points
Output type: Tr sink output

NA0PB40R-□C
Power supply voltage: 100 to 240 V AC or 24 V DC
DI/O: input 24 points, output 16 points
Output type: Ry output

60 points base unit

NA0PA60T-□C
Power supply voltage: 100 to 240 V AC or 24 V DC
DI/O: input 36 points, output 24 points
Output type: Tr sink output

NA0PB60R-□C
Power supply voltage: 100 to 240 V AC or 24 V DC
DI/O: input 36 points, output 24 points
Output type: Ry output

Flexible application via an abundance of options

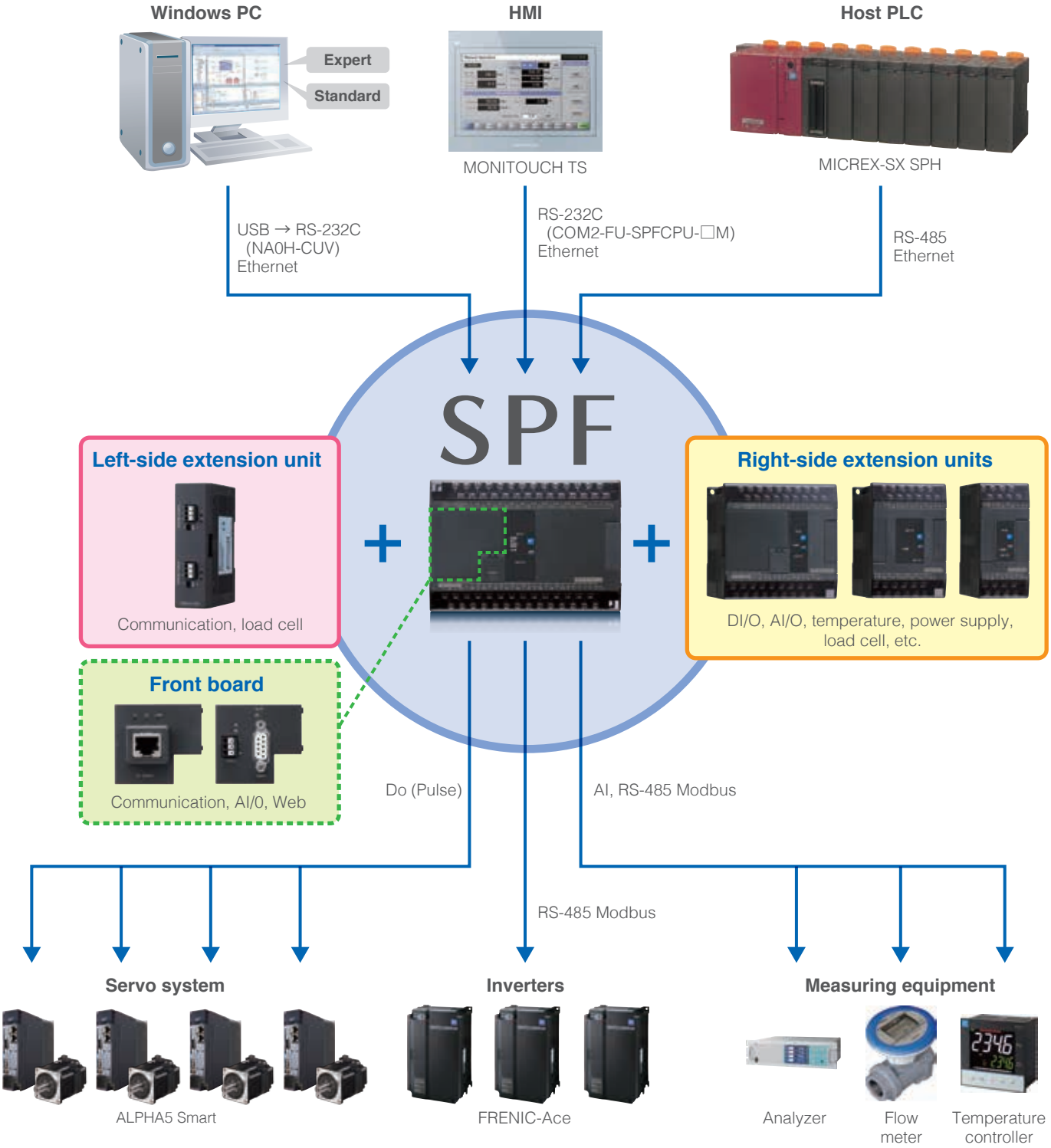

Constructing optimal systems using Fuji components

PROGRAMMING ENVIRONMENT

Further Improvements to Programming Development Efficiency

Two Types of Programming Support Tools Based on Development Style

These are Windows-compatible programming support tools conforming to the IEC61131-3 International Standard (JIS B 3503).

SX-Programmer

Expert(D300win) Development Efficiency Oriented Support Tools

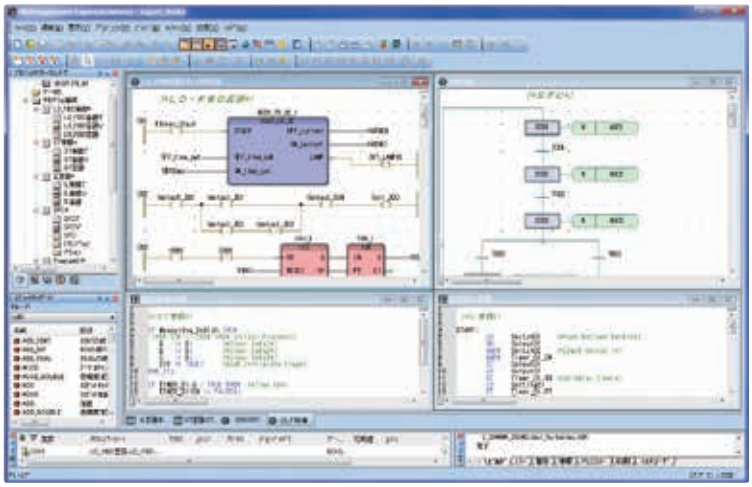

Application

Improvement of software development efficiency

Programming in POU or worksheet units facilitates the use of a structured design method through which programs are created by dividing them up by functionality or process. This method allows the program design process to be divided up between multiple designers, facilitating a substantial reduction in the program creation time.

Programming using the same techniques as those for microcomputers and personal computers

The ST language is similar to the C language, allowing programs to be created using the same techniques as those for microcomputers and personal computers, thus enabling complex calculations that are hard to implement using the Ladder language. Frequently used programs and circuits can be easily reused by creating FBs (function blocks) for them.

Features

Writing in multiple languages

- Supports all five types of program representations specified in the standards.
- Allows programmers to code the optimum combination of representations for the control target.

Excellent documentation function

- The documentation preparation function has been substantially improved. Not only can it print drawing numbers, dates, pages, and drawing borders, but also company logos and comments.

Supported representations

IL (Instruction List)
LD (Ladder Diagram)
FBD (Function Block Diagram)
ST (Structured Text)
SFC (Sequential Function Chart)

Standard

Operability Oriented Support Tools

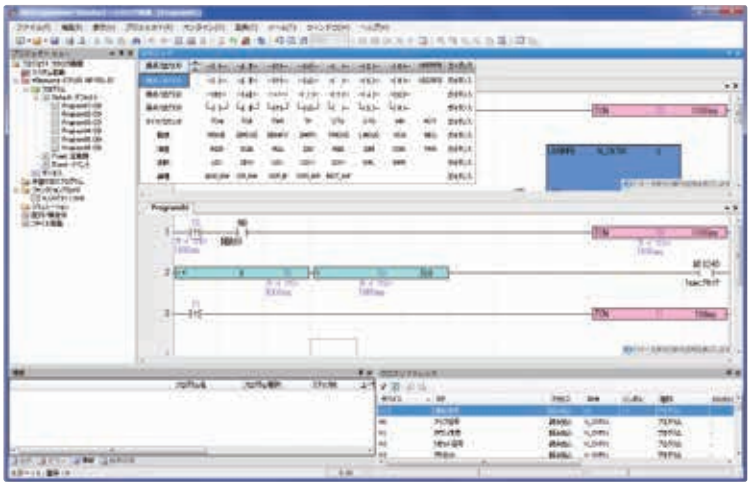

Application

Ladder operation for on-site maintenance personnel

Supports full keyboard operations, making it useful for on-site maintenance personnel. Editing and downloading can be performed immediately after startup.

Utilization of programming resources

Fuji's MICREX-F series and FLEX-PC series program and comment resources can be reused. Screens, operability, and ladder programming can be handled as if using the conventional PC Loader.

Features

Multi-language support

- Support for not only ladder diagrams, but also ST and FBD.
- Allows the programmer to select the proper programming language for the control target.

Intuitive screen operation

- Through guidance display and a command word candidate narrowing-down function based on a keyword search, data can be input without referring to the manual.
- The optimum input mode can be selected based on the situation from functions such as mouse wheel + click input, keyword search input, and Intellisense function input.

Simulation function

- Using the simulation function built into the Standard tool, program operation can be tested without using an actual system.

Resume function

- Automatically displays the position last edited or monitored upon startup.
- Displays the position last monitored and starts monitoring when in online mode.
- Displays the position last edited and enters Edit mode when in offline mode.

Device editor and collation function

- Device information is displayed on a single screen, for example, in the form of a list showing the operating states of devices, enabling you to save time in memory management.
- Details of different points in programs can be displayed, and programs can be edited by referring to collation results.

APPLICATION EXAMPLE

Flexible support for machine based systems

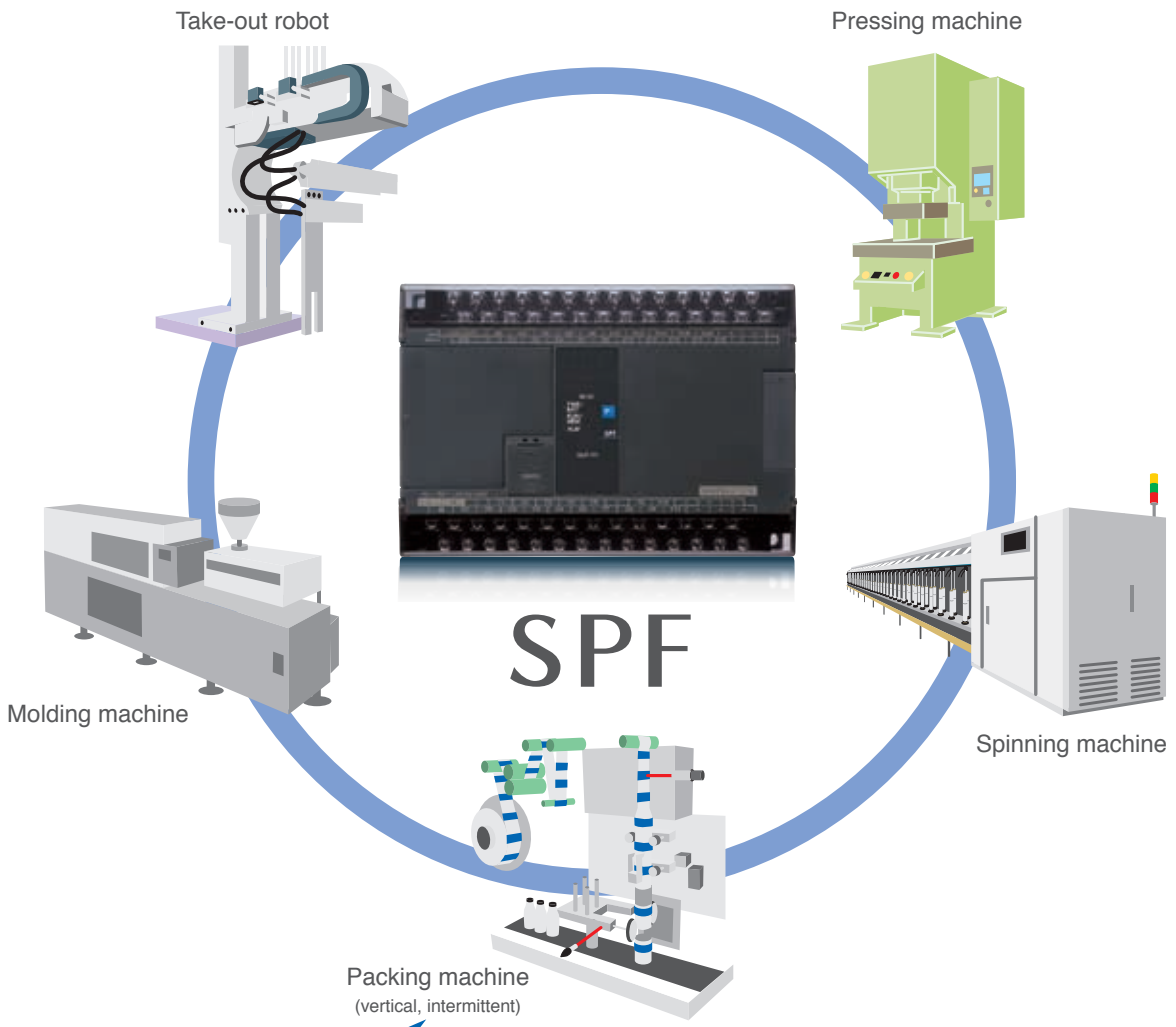

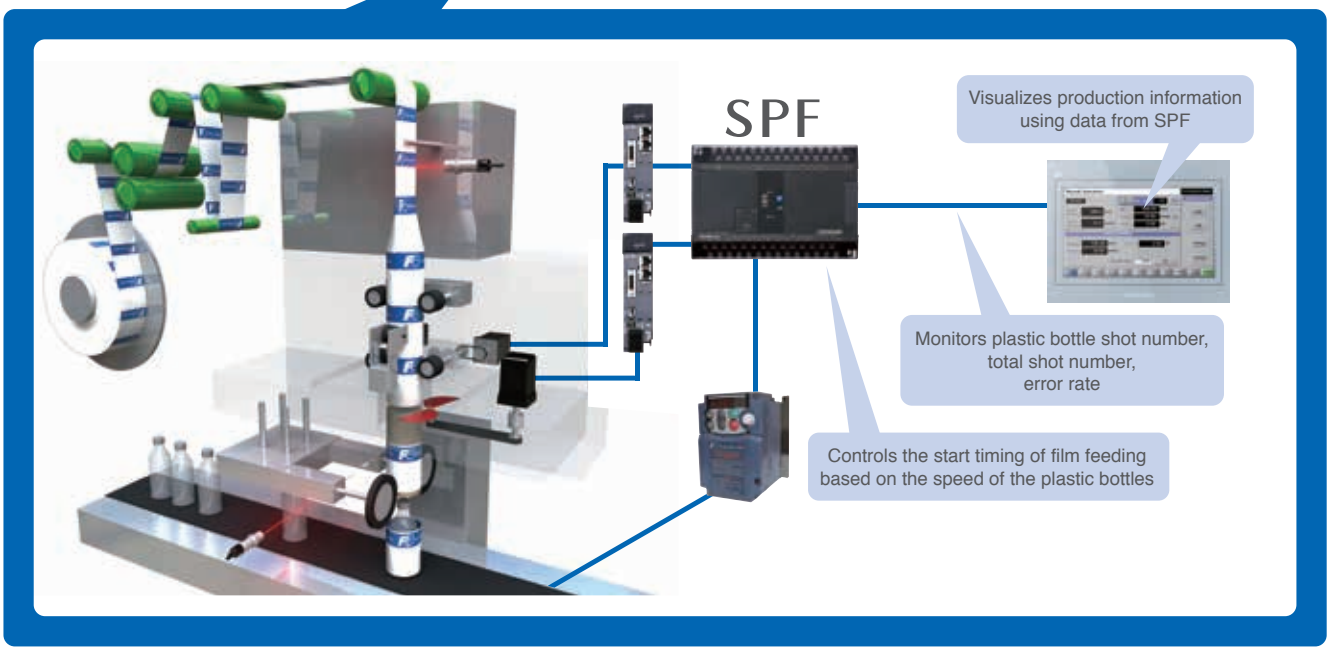

THE SPECIFICATION

SPF

General Specifications

Item		Specifications
Physical environment	Operating ambient temperature	0 to +55 °C
	Storage (transportation) temperature	-25 to +70 °C
	Relative humidity	20 to 95% RH (there should be no condensation) (5 to 95% RH during transport, there should be no condensation)
	Pollution degree	Pollution degree 2 [Note 1)]
	Corrosion resistance	There should be no corrosive gas There should be no adhesion of organic solvents
	Usage altitude	Altitude of 2,000 m or less (air pressure 70kPa or higher during transport)
Mechanical operating conditions	Vibration resistance	Half amplitude: 0.15 mm, constant acceleration: 19.6 m/s^2 2 hours in each direction, total of 6 hours [Note 2) Note 3)]
	Shock resistance	Peak acceleration: 98 m/s^2 three times in each direction
Electrical operating conditions	Electrostatic discharge	±4 kV: contact discharge method ±8 kV: aerial discharge method
	Radioactive radiofrequency electromagnetic field	80 to 1,000MHz 10 V/m 1.4 to 2.0GHz 3 V/m, 2.0 to 2.7GHz 1 V/m
	EFT burst waves	Power lines, input/output signal lines (AC unshielded wire): ±2 kV Communication lines, input/output signal lines (excl. AC unshielded wire): ±1 kV
	Lightning surge	AC power supply: common mode ±2 kV, normal mode ±1 kV DC power supply: common mode ±0.5 kV, normal mode ±0.5 kV
	Radiofrequency electromagnetic field conduction interference	150kHz to 80MHz, 10 V
	Power frequency magnetic field	50Hz, 30A/m
Construction		Open equipment built into panel
Cooling system		Natural cooling

Note 1) Pollution degree 2 Normally, this is the state in which non-conductive pollution occurs. However, there are circumstances stipulated in which condensation may produce a state of temporary conductivity.
Note 2) This is a mounted state in which the unit is fixed to the control panel with fixing screws. Make sure that there are no vibrations or shocks during DIN rail mounting.
Note 3) Be sure to implement vibration countermeasures for environments in which there is repeated or continuous vibrations.

Power Supply Specifications

Item	NA0P□-31C (AC power supply type)	NA0P□-34C (DC power supply type)
Rated voltage	100 to 240 V AC	24 V DC
Permissible voltage range	85 to 264 V AC	20.4 to 28.8 V DC
Rated frequency	50/60Hz	-
Permissible frequency range	47 to 63Hz	-
Permissible momentary power failure time	20 ms or less	10 ms or less
Rated output voltage (service power supply 24 V DC output)	24 V DC ±10%	
Inrush current	20A at 264 V AC	20A at 24 V DC
Dielectric strength	1500 V AC, 1 minute	500 V DC, 1 minute
Insulation method	Insulation with transformer, photocoupler	
Insulation resistance	10MΩ or more with 500 V DC megger	

THE SPECIFICATION

Base unit performance specifications

Item			Specifications: Base unit	
			14/24 points	32/40/60 points
Execution control method			Stored program, cyclic scan method (default task), periodic tasks, event tasks	
Input/output connection method			Direct connection input/output method: Local bus	
Direct connection input/output control method	Overall		Scan batch refresh method	
	Digital input/output		Task synchronization refresh method	
MPU			16-bit OS/execution processor (dual use)	
Memory type			Program memory, data memory, temporary memory	
Programming language <IEC61131-3 compliant>			IL language (Instruction List)	
			ST language (Structured Text)	
			LD language (Ladder Diagram)	
			FBD language (Function Block Diagram)	
			SFC element (Sequential Function Chart)	
Instruction word length			Variable length (differs with instruction) 1 step = 32 bits	
Instruction execution time			LD instruction 0.30 μs	
Program memory capacity			8 Ksteps (1 step = 32 bits)	20 Ksteps (1 step = 32 bits)
Input/output memory		Fixed	512 words	
System memory		Fixed	512 words	
Data memory capacity			20 Kwords	40 Kwords
High-speed standard memory		Fixed	4 Kwords	
Standard memory		Variable	0 Kwords	4 Kwords
Retain memory		Variable	2 Kwords	4 Kwords
User FB instance memory		Variable	4 Kwords	8 Kwords
User FB instance memory Initial value setting area		Variable	4.5 Kwords	9 Kwords
System FB instance memory		Variable	5.5 Kwords	11 Kwords
Timer		Variable	256 points (2 Kwords)	512 points (4 Kwords)
Accumulating timer		Variable	0 points (0 Kwords)	0 points (0 Kwords)
Counter		Variable	256 points (1 Kwords)	512 points (2 Kwords)
Edge detection		Variable	1024 points (2 Kwords)	2048 points (4 Kwords)
Other		Variable	0.5 Kwords	1 Kwords
ZIP file area			64 Kbyte	
Data type			BOOL / INT / DINT / UNIT / UDINT / REAL / TIME / DT / DATE / TOD / WORD / DWORD	
Number of tasks	Default task		1	
	Fixed-cycle task		15 (total number of fixed cycles, events)	
	Event task			
POU	Program		64 / default task 8 / interrupt task	
	User FB		128	
	User FCT		128	
	Number of nested user FB/FCT calls		Total: 64 (User FB/FTC calls from program also included in nesting count.)	
Diagnostic function			Program check, watchdog timer, etc.	
Confidentiality function			Password	
Calendar function			Yes	
Backup	Program memory		Flash memory	
	System definition		Flash memory	
	ZIP file		Flash memory	
	Data memory		Built-in battery: SRAM	
	Calendar		Built-in battery: RTC	
Built-in battery	Backup period		10 years or longer (at product ambient temperature of 55 °C), replacement not possible	
Memory pack	External: Installation and removal possible		Backed up content: Programs : System definition : ZIP file : Data	

Base unit (standard type)

Specifications \ Model			NA0PB14R-34C/31C		NA0PB24R-34C/31C		NA0PB32R-34C/31C		NA0PB40R-34C/31C		NA0PA60R-34C/31C	
Digital input	24 V DC	High speed (100kHz)	2 points	8 points	2 points	14 points	2 points	20 points	2 points	24 points	2 points	36 points
		Medium speed (20kHz)	6 points		12 points		14 points		14 points		14 points	
		Low speed (0.38kHz)	-		-		4 points		8 points		20 points	
Digital output	Relay		6 points		10 points		12 points		16 points		24 points	
Communication port		Built-in	1 port (Port 0, RS-232C)*									
		Expansion	4 ports (Ports 1 to 4: RS-485, RS-232C, or Ethernet)									
Calendar			Range: Upto 2069-12-31 23:59:59 (23:59:59 on Dec. 31, 2069), Accuracy: ±20 s/day (25 °C)									
External connection			M3 screw terminal block									
External dimensions			Fig. 1									

* Shared with Loader connection

Base unit (high-functionality)

Specifications \ Model			NA0PA14T-34C		NA-0PA24T-34C/31C		NA-0PA32T-34C/31C		NA-0PA40T-34C/31C		NA-0PA60T-34C/31C	
Digital input	24 V DC	High speed (200kHz)	2 points	8 points	4 points	14 points	6 points	20 points	6 points	24 points	8 points	36 points
		Medium speed (20kHz)	6 points		10 points		10 points		10 points		8 points	
		Low speed (0.38kHz)	-		-		4 points		8 points		20 points	
Digital output	Transistor	High speed (200kHz)	4 points	6 points	4 points	10 points	6 points	12 points	6 points	16 points	8 points	24 points
		Medium speed (20kHz)	2 points		4 points		2 points		2 points		-	
		Low speed	-		2 points		4 points		8 points		16 points	
Communication port		Built-in	1 port (Port 0, RS-232C)*									
		Expansion	4 ports (Ports 1 to 4: RS-485, RS-232C, or Ethernet)									
Calendar			Range: Upto 2069-12-31 23:59:59 (23:59:59 on Dec. 31, 2069), Accuracy: ±20 s/day (25 °C)									
External connection			M3 screw terminal block									
External dimensions			Fig. 1									

* Shared with Loader connection

DIO expansion unit

Specifications \ Model		NA0E24R-34	NA0E24T-31	NA0E08R-3	NA0E08T-3	NA0E08T-0	NA0E16R-0	NA0E16T-0	NA0E08X-3
Digital input	24 V DC	14 points		4 points		-			8 points
Digital output	Relay	10 points	-	4 points	-	-	16 points	-	-
	Transistor	-	10 points	-	4 points	8 points	-	16 points	-
External connection		M3 screw terminal block							
External dimensions		Fig. 1		Fig. 3			Fig. 2		Fig. 3

THE SPECIFICATION

AIO unit

Specifications / Model	NA0AX06-MR	NA0AW06-MR	NA0AY02-MR
Input	6 ch	4 ch	-
Output	-	2 ch	2 ch
Resolution	12-bit or 14-bit		14-bit
Input/output range	-10 to 10 V, -5 to 5 V, 0 to 10 V, 0 to 5 V -20 to 20mA, -10 to 10mA, 0 to 20mA, 0 to 10mA		
Overall accuracy	±1%		
Sampling cycle	Synchronized with base unit scanning		
Max. permissible input	Voltage: ±15 V Current: 30mA		-
Input impedance	Voltage: 63.2kΩ, Current: 250Ω		-
Insulation method	Non-insulated		
External power supply	24 V DC, 53mA	24 V DC, 103mA	24 V DC, 90mA
Internal current consumption	5 V DC, 25mA	5 V DC, 35mA	5 V DC, 33mA
External connection method	M3 screw terminal block		
External dimensions	Fig. 3		

AIO board

Specifications / Model	NA3AY02-MR	NA3AW03-MR
Input	-	2 ch
Output	2 ch	1 ch
Resolution	12-bit	
Input/output range	0 to 10 V 0 to 20mA	
Sampling cycle	Synchronized with base unit scanning	
Overall accuracy	±1%	
Insulation method	Non-insulated	
Internal current consumption	5 V DC, 223mA	5 V DC, 158mA
External connection method	Open type screw connector M2 screw terminal	
Mounting method	Mounted on front of base unit	

Thermocouple input unit and resistance thermometer element unit

Specifications / Model	NA0AX02-TC	NA0AX06-TC	NA0AX16-TC	NA0AX06-PT
Number of input channels	2 ch	6 ch	16 ch	6 ch
Connectible sensors	Thermocouple type: J, K, R, S, E, T, B, N			Resistance temperature sensor: Pt100, Pt1000 (JIS or DIN)
Temperature measurement range	J: -200.0 to 1200.0 °C K: -200.0 to 1200.0 °C T: -190.0 to 380.0 °C E: -190.0 to 1000.0 °C N: -200.0 to 1000.0 °C B: 350.0 to 1800.0 °C R: 0.0 to 1800.0 °C S: 0.0 to 1700.0 °C			Pt100: -200.0 to 850.0 °C Pt1000: -200.0 to 600.0 °C
Cold junction compensator	Built into unit			-
Resolution	0.1 °C or 1 °C			
Sampling cycle	1 s (high speed) or 2 s (low speed)	2 s (high speed) or 4 s (low speed)	3 s (high speed) or 6 s (low speed)	1 s (high speed) or 2 s (low speed)
Overall accuracy	±(1% + 1 °C)			±1%
Insulation method	Transformer (power supply) and photofcoupler (signal)		Non-insulated	
External power supply	24 V DC, 21mA	24 V DC, 29mA	24 V DC, 58mA	24 V DC, 16mA
Internal current consumption	5 V DC, 30mA			5 V DC, 32mA
External connection method	European type 8-pole terimal block (M2)		M3 screw terminal block	
External dimensions	Fig. 3		Fig. 1	Fig. 3

Load cell unit

Specifications / Model	NA0F-LC1
Number of input channels	1 ch
Resolution	16-bit (incl. sign bit)
Number of words occupied	1 word
Sampling cycle	5/10/25/30/60/80Hz
Nonlinearity	0.01% with full scale (when ambient temperature 25 °C)
Zero drift	0.2 μV/°C
Gain drift	10 ppm/°C
Load cell applied voltage	5 V DC, 100Ω
Input range	0 to 2 mV/V, 0 to 5 mV/V, 0 to 10 mV/V, 0 to 20 mV/V
Moving average	None/2/4/8 times
Insulation method	Transformer (power supply) or photocoupler isolation (signal)
External power supply	24 V DC, 48mA
Internal current consumption	5 V DC, 32mA
External connection method	M3 screw terminal block
External dimensions	Fig. 3

High-accuracy load cell unit

Specifications / Model	NA0AF-LC1
Number of input channels	1 ch
Resolution	24-bit (incl. sign bit)
Measurement voltage range	-1 mV to 39 mV
Load cell applied voltage	5 V DC, 350Ω
Sampling cycle	100 times/s
Input sensitivity, resolution	0.15 μV/d or higher (d = min. scale), 1/60000
Insulation method	Transformer (power supply) and photocoupler isolation (signal)
External power supply	24 V DC, 48mA
Internal current consumption	5 V DC, 120mA
External connection method	M3 screw terminal block
External dimensions	Fig. 3

Communication unit/board

Specifications / Model	NA3LA-RS1	NA0LA-RS3	NA0LA-RS5
RS-232C port	1 port (Port 1)	2 ports (Port 3, Port 4)	-
RS-485 port	1 port (Port 2)	-	2 ports (Port 3, Port 4)
Synchronization method	Start-stop synchronization method		
Transmission speed	1200/2400/4800/9600/19200/38400/57600/115200		
Transmission distance	RS-232C: 15 m RS-485: 1 km	15 m	1 km
Number of connection units	RS-232C: 1:1 RS-485: 1:15	1:1	1:15
Internal current consumption	5 V DC, 55mA	5 V DC, 18mA	5 V DC, 95mA
Connection method	RS-232C: D-sub 9 pin (female) RS-485: European type 3-pole terminal block	D-sub 9 pin (female)	European type 3-pole terminal block
Mounting method	Mounted on front of base unit	Connection to left side of base unit	

Ethernet communication unit/board

Specifications / Model		NA3LA-ET1	NAL0A-ET1
Commu-nication functions	Application communication mode	General-purpose communication Fixed buffer communication	
	Loader com-mand commu-nication mode	Communication with original Fuji Electric communica-tion protocol	
Interface		10BASE-T/100BASE-TX Automatic switching with auto negotiation	
Media control		IEEE802.3/IEEE802.3u	
Transmission speed		10 Mbps/100 Mbps	
Transmission media		Twisted pair cable (UTP)	
Transmission protocol		TCP/IP, UDP/IP	
Internal current consumption		5 V DC, 110mA	5 V DC, 160mA
Mounting method		Mounted on front of base unit	Connection to left side of base unit

NEW

Web board

Specifications / Model		NA3LA-WE1
Commu-nication functions	Web access	HTTP communications
	Loader command communication mode	Communication with original Fuji Electric communication protocol
Interface		10BASE-T/100BASE-TX Automatic switching with auto negotiation
Media control		IEEE802.3/IEEE802.3u
Transmission speed		10 Mbps/100 Mbps
Transmission media		Twisted pair cable (UTP)
Transmission protocol		TCP/IP
Internal current consumption		5 V DC, 150mA
Mounting method		Mounted on front of base unit

Memory pack

Specifications / Model	NA8PMF-20
Storable data	Programs, system definitions, ZIP files, data

Loader connection cable

Specifications / Model	NA0H-CUV
Specifications	USB (A connector) / RS-232C (MD4M connector), 180 cm

DIMENSIONS

Fig. 1

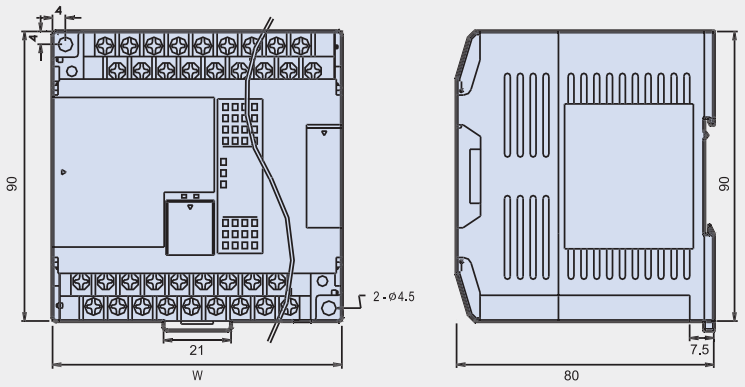

W	Model
90 mm	NA0PA14*, NA0PA24* NA0PB14*, NA0PB24* NA0AX16-TC, NA0E24*
130 mm	NA0PA32*, NA0PA40* NA0PB32*, NA0PB40*
175 mm	NA0PA60* NA0PB60*

Fig. 2

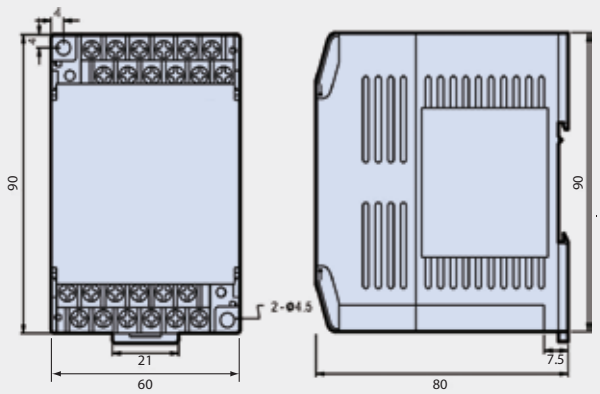

Fig. 3

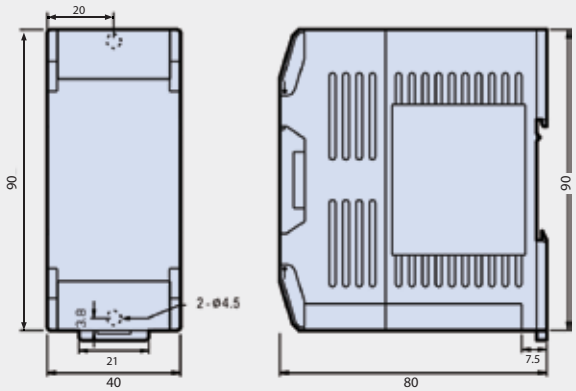

Fig. 4

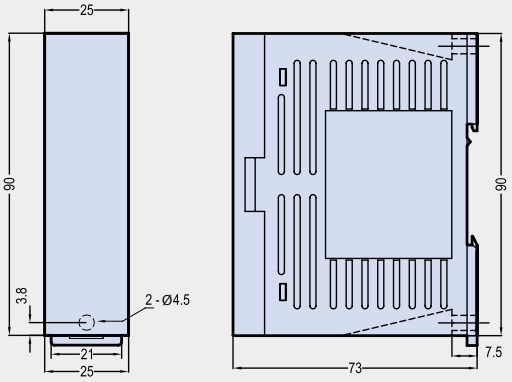

Model List

Product name		Model	Specifications
Base unit			
High-functionality type base unit <NA0PA>		NA0PA14T-34C	8 points 24 V DC digital input; 6 points transistor digital output; RS-232C port: 24 V DC power supply
		NA0PA24T-34C	14 points 24 V DC digital input; 10 points transistor digital output; RS-232C port: 24 V DC power supply
		NA0PA32T-34C	20 points 24 V DC digital input; 12 points transistor digital output; RS-232C port: 24 V DC power supply
		NA0PA40T-34C	24 points 24 V DC digital input; 16 points transistor digital output; RS-232C port: 24 V DC power supply
		NA0PA60T-34C	36 points 24 V DC digital input; 24 points transistor digital output; RS-232C port: 24 V DC power supply
		NA0PA24T-31C	14 points 24 V DC digital input; 10 points transistor digital output; RS-232C port: 100 to 240 V AC power supply
		NA0PA32T-31C	20 points 24 V DC digital input; 12 points transistor digital output; RS-232C port: 100 to 240 V AC power supply
		NA0PA40T-31C	24 points 24 V DC digital input; 16 points transistor digital output; RS-232C port: 100 to 240 V AC power supply
		NA0PA60T-31C	36 points 24 V DC digital input; 24 points transistor digital output; RS-232C port: 100 to 240 V AC power supply
Standard type base unit <NA0PB>		NA0PB14R-34C	8 points 24 V DC digital input; 6 points relay digital output; RS-232C port: 24 V DC power supply
		NA0PB24R-34C	14 points 24 V DC digital input; 10 points relay digital output; RS-232C port: 24 V DC power supply
		NA0PB32R-34C	20 points 24 V DC digital input; 12 points relay digital output; RS-232C port: 24 V DC power supply
		NA0PB40R-34C	24 points 24 V DC digital input; 16 points relay digital output; RS-232C port: 24 V DC power supply
		NA0PB60R-34C	36 points 24 V DC digital input; 24 points relay digital output; RS-232C port: 24 V DC power supply
		NA0PB24R-31C	14 points 24 V DC digital input ; 10 points relay digital output ; RS-232C port ; 100 to 240 V AC power supply
		NA0PB32R-31C	20 points 24 V DC digital input ; 12 points relay digital output ; RS-232C port ; 100 to 240 V AC power supply
		NA0PB40R-31C	24 points 24 V DC digital input ; 16 points relay digital output ; RS-232C port ; 100 to 240 V AC power supply
		NA0PB60R-31C	36 points 24 V DC digital input ; 24 points relay digital output ; RS-232C port ; 100 to 240 V AC power supply
Expansion unit			
Power supply unit	Right side	NA0S-2	5 V DC, 24 V DC output: 100 to 240 V AC input power supply
		NA0S-4	5 V DC, 24 V DC output: 24 V DC input power supply
DIO unit	Right side	NA0E24R-34	14 points 24 V DC digital input; 10 points relay digital output; 24 V DC power supply
		NA0E24T-31	14 points 24 V DC digital input; 10 points transistor digital output; 100 to 240 V AC power supply
		NA0E08R-3	4 points 24 V DC digital input; 4 points relay digital output
		NA0E08T-3	4 points 24 V DC digital input; 4 points transistor digital output
		NA0E08T-0	8 points transistor digital output
		NA0E08X-3	8 points 24 V DC digital input
		NA0E16R-0	16 points relay digital output
		NA0E16T-0	16 points transistor digital output
AIO unit	Right side	NA0AY02-MR	2 ch output
		NA0AW06-MR	4 ch input + 2 ch output
		NA0AX06-MR	6 ch input
AIO board	Front	NA3AY02-MR	2 ch output
		NA3AW03-MR	2 ch input + 1 ch output
Temperature measurement unit	Right side	NA0AX02-TC	2 ch thermocouple input, 0.1 °C resolution
		NA0AX06-TC	6 ch thermocouple input, 0.1 °C resolution
		NA0AX16-TC	16 ch thermocouple input, 0.1 °C resolution
		NA0AX06-PT	6 ch resistance temperature sensor input, 0.1 °C resolution
Load cell unit	Right side	NA0F-LC1	1 ch, 16-bit resolution
High-accuracy load cell unit	Left side	NA0FA-LC1	1 ch, 24-bit resolution
Communication unit	Left side	NA0LA-RS3	2 RS-232C ports (Port 3 + Port 4)
		NA0LA-RS5	2 RS-485 ports (Port 3 + Port 4)
		NA0LA-ET1	1 10BASE-T/100BASE-TX Ethernet port
Communication board	Front	NA3LA-RS1	1 RS-232C port (Port 1) + 1 RS-485 port (Port 2)
		NA3LA-ET1	1 10BASE-T/100BASE-TX Ethernet port
		NA3LA-WE1	1 10BASE-T/100BASE-TX Ethernet port
Related devices			
PC Loader		NP4H-SEDBV3	Programming Support Tool Expert (D300win) version 3 (Japanese/English)
		NP4H-SWN	Programming Support Tool Standard (Japanese/English)
Loader connection cable		NA0H-CUV	USB (A connector) / RS-232C (MD4M connector), 180 cm
Memory pack		NA8PMF-20	Program, data storage memory
Healthy unit (terminating connector)		NA8P-HE	Unit for right side expansion unit fall-out detection/failure detection

⚠ Safety Precautions

- Before using this product, read the "Instruction Manual" and "User manual" carefully or consult with the retailer you purchased this product from and use this product correctly.
- The product described in this catalog has not been designed and produced to be used for equipment or systems which could endanger human life.
- The product described in this catalog must not be used for any application that requires a high degree of safety and has a large impact on life, the human body, community, important assets, or rights (e.g., for power stations, radiation-related facilities, railways, space/airline facilities, lifeline facilities, or medical equipment).
- Please make sure that the use of the products does not lead to a serious accident in the event that a failure or malfunction occurs in the products described in this catalog. And in cases of failure or malfunction, safety measures should be prepared using external devices in a systematic manner as standard operating conditions for the products.
- For safe use, this product must be connected by those with specialized skills (in electric work, wiring work, etc.).
- Use a power supply which is reinforced and isolated from an AC power supply for an external power supply to connect to DC I/O (such as 24 V DC power supply). (You are recommended to use a power supply that conforms to EN60950.) Otherwise, an accident or breakdown may result.

Before purchasing this product

- For the details, price, and installation fee of the products included in this catalog, contact the retailer or Fuji Electric Co., Ltd.
- Please note that for product improvement, the appearance and specifications may be subject to change without prior notice.
- Please note in advance that printed and actual colors may differ slightly.

● Appearance and specifications are subject to change without prior notice for the purpose of product improvement.

Fuji Electric Co., Ltd.

Gate City Ohsaki, East Tower,
11-2, Osaki 1-chome, Shinagawa-ku, Tokyo 141-0032, Japan

Phone : +81-3-5435-7066
Fax : +81-3-5435-7475
URL : www.fujielectric.com/

2019-11(K19h/C16) PDF FOLS 22B1-E-0019h